

CET Current Clamps Selection Guide

PMC-SCCP series current clamps feature quality construction and high accuracy with excellent dynamic range that is designed specifically to be used with the CET's Advanced PQ Analyzer for non-intrusive or retrofit applications. PMC-SCCP series covers a wide application range with rated current at 5A, 20A, 200A, 500A and 1000A. There should have one to suit for your application. PMC-SCCP current clamps are voltage-output type sensor with BNC connector to guarantee measurement safety and facilitate easy connection. Besides, they all comply with CAT III safety requirements according to the IEC 61010-2-032 standard. It is extremely important to observe the cautionary notes to ensure the safe use of the current clamps.



Measurement Procedures

To connect the clamp output to the measurement device:

- Align the BNC connector grooves with the connector guide of the BNC receptacle, insert and then turn the connector clockwise to lock the components.

To connect clamp to the conductor:

- Pull the lever downward to open the clamp jaws.
- Put the clamp around only the live conductor in the center with the current direction indicator pointing towards the load side.
- Attach the clamp around only the Live conductor for proper measurement. Clamping multiple wires together for single-phase or 3-phase cables will not produce any readings.
- Close the clamp jaws.
- Secure the clamp in place to avoid adding extra weight on conductor.

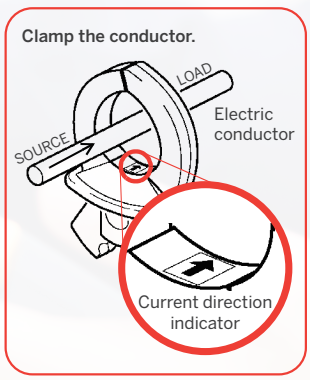

To disconnect clamp from conductor:

- Open the clamp jaws and remove it away from the live conductor.
- Turn the BNC connector counter clockwise to release the lock and pull it from the BNC receptacle.

Caution

- Avoid using the instrument if it has been exposed to rain or moisture, or if your hands are wet.
- To avoid electric shock when performing measurements on live conductors, always user proper protective gear such as insulated gloves, boots and a safety helmet.
- This product should only be connected to the secondary side of a breaker, which is designed to prevent accidents from occurring in the event of a short circuit. The product should never be used on the primary side of a breaker because un-restricted current flow could cause serious accidents if a short circuit occurs.
- To avoid short circuits and potentially life threatening hazards, never attach the instrument to a circuit that operates at a voltage that is higher than its rated voltage.
- Never use the instrument to measure currents that are higher than the rated maximum limit for an extended period of time or it may cause permanent damage to the instrument.
- Do not use the instrument around non-insulated conductors or if the insulation has been damaged.
- The secondary voltage output should be connected to the receiving circuit and should not be left open-circuited before connecting the instrument to a live conductor.
- Dropping the instrument or subjecting it to mechanical shock could cause damage to the contact mechanism and adversely affect its measurement accuracy.

PMC-SCCP Technical Specifications

		PMC-SCCP-50A-500mV-B-A-B	PMC-SCCP-200A-200mV-B-B-B	PMC-SCCP-500A-500mV-B-B-B	PMC-SCCP-9667
				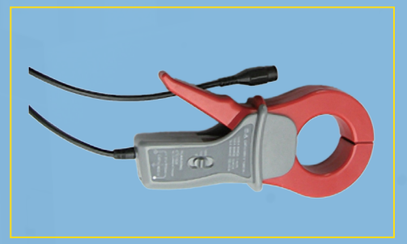	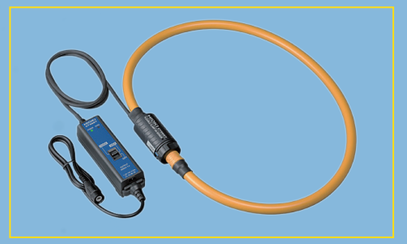
Technical Specifications	**Rated Nominal Current (In)**	5A	20A/200A Selectable	500A	500A/1000A Selectable
	Maximum Current (Imax)	50A continuous @ 45-66Hz and 25°C	260A continuous @ 45-66Hz and 25°C	500A continuous @ 45-66Hz and 25°C	10000A continuous @ 45-66Hz and 25°C
	Output Voltage	10 mV/A	10 mV/A (20A), 1 mV/A (200A)	1 mV/A	500 mV/A
	Amplitude Accuracy	±0.3% rdg. ± 0.02% f.s. @ 45Hz-66Hz, at core center	±0.3% rdg. ± 0.02% f.s. @ 45Hz-66Hz, at core center	±0.5% rdg. ± 0.02% f.s. @ 45Hz-66Hz, at core center	±2.0% rdg. ± 1.5 mV (for input 10% or more of the range) @ 45Hz-66Hz, at core center
	Phase Accuracy	± 2° (45 Hz to 5kHz)	± 0.5° (45 Hz to 5kHz)	± 0.5° (45 Hz to 5kHz)	± 1° (45 Hz to 5kHz)
	Amplitude Frequency Characteristics	± 1% (45Hz - 5kHz), deviation from accuracy	± 1% (45Hz - 5kHz), deviation from accuracy	± 1% (45Hz - 5kHz), deviation from accuracy	± 3dB (10Hz - 20kHz), deviation from accuracy
	Conductor Position	± 0.5% (deviation from center)	± 0.5% (deviation from center)	± 0.5% (deviation from center)	± 3% (deviation from center)
	External Magnetic Field	⩽ 0.1A @ 400A/m	⩽ 0.1A @ 400A/m	⩽ 0.1A @ 400A/m	⩽ 5A (7A max.) @ 400A/m
	Maximum rated voltage to earth	300 Vrms	600 Vrms	600 Vrms	1000 Vrms
Environmental Conditions	**Measurement Category**	CAT III 300V	CAT III 600V	CAT III 600V	CAT III 1000V
	Pollution Degree	II	II	II	II
	Temperature Coefficient	0.02% rdg. / °C	0.02% rdg. / °C	0.02% rdg. / °C	± 2% rdg. / °C
	Dielectric Strength	3000V AC rms for 15 seconds	3000V AC rms for 15 seconds	3000V AC rms for 15 seconds	6880V AC rms for 15 seconds (between circuit and sensor @ 50/60Hz)
	Operating Temp.	0°C to 50°C	0°C to 50°C	0°C to 50°C	0°C to 40°C
	Storage Temp.	-10°C to 60°C	-10°C to 60°C	-10°C to 60°C	-10°C to 50°C
	Relative Humidity	⩽ 80% non-condensing	⩽ 80% non-condensing	⩽ 80% non-condensing	⩽ 80% non-condensing
	Altitude	2000m max.	2000m max.	2000m max.	2000m max.
Mechanical Characteristics	**Clamp Diameter**	15 mm (max. conductor diameter)	24 mm (max. conductor diameter)	50mm (max. conductor diameter)	254 mm (Measurable conductor diameter)
	Cable Length	3m	3m	3m	Cord length: 2 m (Sensor to circuit), 1 m (Circuit to connector)
	Dimensions (Lever excluded)	48(W) x 120(H) x 20(D) mm	64(W) x 130(H) x 26(D) mm	108(W) x 216(H) x 35(D) mm	Sensor: 910 mm, Circuit: 57(W) x 86(H) x 30(D) mm
	Weight	200 g	300 g	500 g	Sensor: 240 g, Circuit: 140 g
	Power supply	N/A	N/A	N/A	LR03 alkaline battery × 4 (continuous operation max. 168 hours) or AC ADAPTER 9445 (optional)
	Output Terminal	BNC	BNC	BNC	BNC
Standards	**Safety / EMC**	Safety: EN 61010-2-032: 2012 (CAT III 300V)	Safety: EN 61010-2-032: 2012 (CAT III 600V)	Safety: EN 61010-2-032: 2012 (CAT III 600V)	Safety: EN 61010-2-032: 2012 (CAT III 1000V) EMC: EN 61326: 1997+A1: 1998 +A2: 2001+A3: 2003 EN 61000-3-2: 2000 EN 61000-3-3: 1995+A1: 2001

Limited Warranty

The instrument is guaranteed for one year from the Date of Purchase against any manufacturing defects. Shall the product fail to perform according to the specifications during the warranty period due to manufacturing defects, it will be replaced free of charge. However, the warranty would be void under the following conditions:
1. There are obvious signs that the product has been tampered with.
2. The product has been damaged due to incorrect operation under conditions other than those that are specified in this document.

No responsibility is accepted for any injuries, losses, damage or costs as a result, directly or indirectly, of manufacturing defects, mishandling or incorrect operation of the instrument.

Dimensions

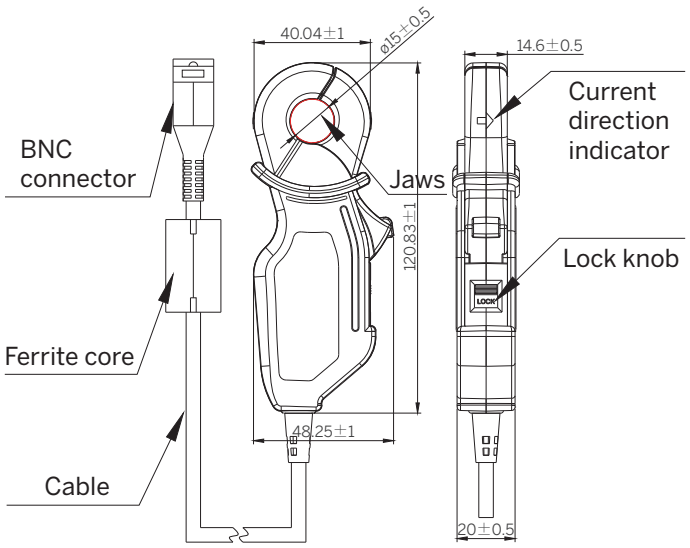

PMC-SCCP-50A-500mV-B-A-B

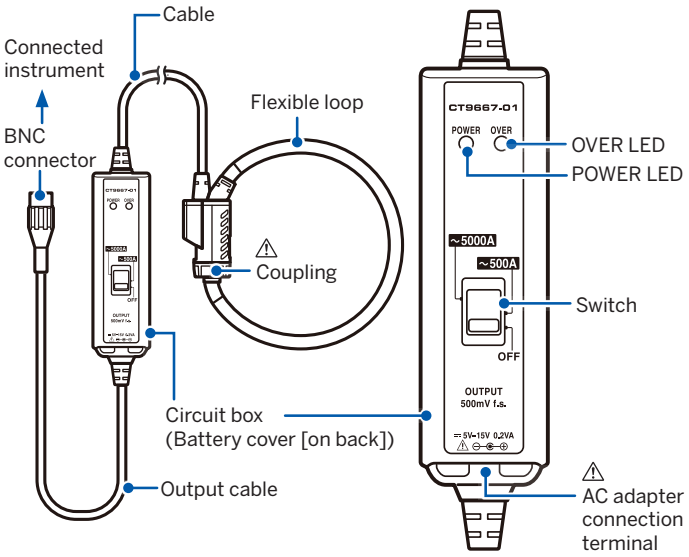

PMC-SCCP-9667

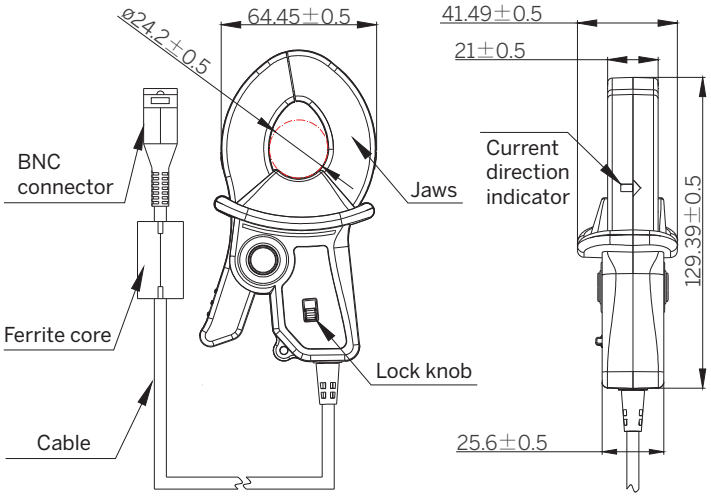

PMC-SCCP-200A-200mV-B-B-B

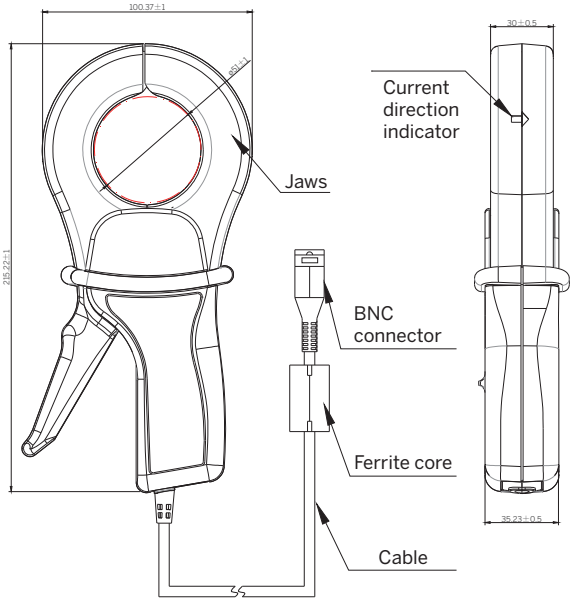

PMC-SCCP-500A-500mV-B-B-B

Maintenance

- Always keep the clamp closed when it's not being used to prevent dust or foreign objects from accumulating on the contact surfaces inside the clamp jaws for best electrical and mechanical performance.
- Bending, pinching or pulling on the cable could cause permanent damage to the cable's insulation properties.
- Clean the surface of the instrument periodically with a soft cloth damped with water or mild detergent.
- Do not use abrasive cleaner or solvent such as benzene, alcohol, acetone, ether, ketones, thinners or gasoline as they can deform or cause discoloration to the case.
- Do not submerge the instrument in liquid or expose it to moisture or high humidity as these would cause oxidation and degrade its performance.
- Do not expose the instrument to direct sunlight, high temperature, high humidity or condensation for an extended period of time. Doing so may damage its insulation such that it no longer meet its safety specifications.
- Should the instrument appear to malfunction, please contact your local CET representative or distributor for support. Do not attempt to open the instrument as doing so will void the warranty.

Contact us

CET SINGAPORE
No.7 Mandai Link #05-33
Mandai Connection Blk B Singapore 728653
Tel:(65)6677 7279
EMAIL: contact@cetsingapore.com.sg

WWW.CETSINGAPORE.COM.SG